PoWer MIG Series

GeKaMac®

PoWer MIG 3500 C

Users Manual

Please Read and Understand This Manual
Before Operating The Welding Machine

www.gedikwelding.com

This machine is for internal use only.

It complies with the WEEE Directive.

This machine has been designed in accordance with the EN 60974-1 and EN 60974-10 standards.

The machine is safe when installation, operation, and maintenance are performed in accordance with the user manual and regulations. The operator and machine owner are responsible for adhering to safety rules.

Gedik Kaynak San. Ve Tic. A.Ş. assumes no responsibility for safety or CE compliance if any modifications are made to the machine or if safety rules are not followed.

This Class A equipment is not suitable for use in homes and similar residential areas where the power supply is provided by the low-voltage public electricity network.

This machine is not household waste and cannot be disposed of in the trash.

When the machine reaches the end of its service life or becomes obsolete, it must be disposed of in accordance with regulations.

COMPLIES WITH THE WEEE DIRECTIVE.

Eco Design Statement

This machine has been designed and manufactured in accordance with the requirements of the 2009/125/EC Eco Design Directive concerning the environmentally friendly design of energy-related products.

Accordingly, machines with an idle mode are as follows.

	Idle Mode
MMA	**X**
MIG	√
TIG	√
Plazma	√
SAW	**Out of Scope**

Efficiency measurements should be conducted only on the power unit. The water cooling system should be disabled. For more information on measurements and machine settings, Gedik Kaynak Sanayi ve Ticaret A.Ş. should be consulted.

Dear Customer

This instruction manual will help you get to know your new machine. Read the manual carefully and you will soon be familiar with all the many great features of your new product. Meanwhile, pleaseremember well safety rules and operate as instruction.

If you treat your product carefully, this definitely helps to prolong its enduring quality and reliability–things which are both essential prerequisites for getting outstanding results.

Production specification may change without advance notice.

The model you purchase is for:

- ☐ PoWer MIG 3500 C

Please find corresponding models from the "Contents".

Important:

Please take special note of safety rules and operate as instruction in case of damage and seriousinjury.

Safety Rules

“Danger” indicates an imminently hazardous situation which, if not avoided, will result in death or serious injury.

“Warning!” indicates a possible hazardous situation which, if not avoided, could result in death or serious injury. The possible hazards are explained in the text.

“Caution” indicates a possible hazardous situation which, if not avoided, may result in slight or moderate injury.

“Note!” indicates a situation which implies a risk of impaired welding result and damage to the equipment.

“Important!” indicates practical tips and other useful special-message. It is no signal word for a harmful or dangerous situation.

Utilisation for intended purpose only

- The machine may only be used for jobs as defined by the “Intended purpose”.
- Utilisation for any other purpose, or in any other manner, shall be deemed to be “not in accordance with the intended purpose”. The manufacturer shall not be liable for any damage resulting from such improper use.

Safety signs

- All the safety instructions and danger warnings on the machine must be kept in legible condition, not removed, not be covered, pasted or painted cover.

Safety inspection

- The owner/operator is obliged to perform safety inspection at regular intervals.
- The manufacturer also recommends every 3-6 months for regular maintenance of power sources.

Electric shock can kill

- Touching live electrical parts can cause fatal shocks or severe burns. The electrode and work circuit is electrically live whenever the output is on. The input power circuit and machine internal circuits are also live when power is on. In MIG/MAG welding, the wire, drive rollers, wire feed housing and all metal parts touching the welding wire are electrically live. Incorrectly installed or improperly grounded equipment is a hazard.
- Do not touch live electrical parts of the welding circuit, electrodes and wires with your bare skin or wet clothing.
- The operator must wear dry hole-free insulating welding gloves and body protection while performs the welding.
- Insulate yourself from work and ground using dry insulating protection which is large enough to prevent you full area of physical contact with the work or ground.
- Connect the primary input cable according to rules. Disconnect input power or stop machine before installing or maintenance.
- If welding must be performed under electrically hazardous conditions as follow: in damp locations or wearing wet clothing; on metal structures such as floors, gratings, or scaffolds; when in cramped positions such as sitting, kneeling, or lying; or in occasion when there is a high risk of unavoidable or accidental contact with the work piece or ground. Must use additional safety precautions: semiautomatic DC constant voltage (wire) welder, DC manual (Stick) welder and AC welder with reduced open-load voltage.
- Maintain the electrode holder, ground clamp, welding cable and welding machine in good, safe operating condition. Replace damaged part immediately.

Electric and magnetic fields (EMF) may be dangerous

- If electromagnetic interference is found to be occurring, the operator is obliged to examine any possible electromagnetic problems that may occur on equipment as follow:

- minas, signal and data-transmission leads
- IT and telecoms equipment
- measurement and calibration devices
- Wearers of pacemakers

- Measures for minimizing or preventing EMC problems:

– Mains supply

If electromagnetic interference still occurs, despite the fact that the mains connection in accordance with the regulations, take additional measures

– Welding cables

Keep these as short as possible

Connect the work cable to the work piece as close as possible to the area being welded.

Lay tem well away from other cables.

Do not place your body between your electrode and work cables.

– Equipotential bonding

– Workpiece grounding (earthing)

– Shielding

Shield the entire welding equipment and other equipment nearby.

ARC rays can burn

- Visible and invisible rays can burn eyes and skin.
- Wear an approved welding helmet or suitable clothing made from durable flame-resistant material (leather, heavy cotton, or wool) to protect your eyes and skin from arc rays and sparks when welding or watching.
- Use protective screens or barriers to protect other nearby personnel with suitable, non-flammable screening and/or warn them not to watch the arc nor expose themselves to the arc rays or to hot spatter or material.

Fumes and gases can be dangerous

- Welding may produce fumes and gases, breathing these fumes and gases can be hazardous to your health.
- When welding, keep your head out of the fume. If inside, ventilate the area at the arc to keep fumes and gases away from the breathing zone. If ventilation is not good, wear an approved air-supplied respirator.
- Work in a confined space only if it is well ventilated, or while wearing an air-supplied respirator.
- Welding fumes and gases can displace air and lower the oxygen level causing injury or death. Always use enough ventilation, especially in confined areas, to insure breathing air is safe.

Welding and cutting sparks can cause fire or explosion

- When not welding, make sure the electrode circuit is not touching the work or ground. Accidental contact can cause sparks, explosion, overheating, or fire. Make sure the area is safe before doing any welding.
- Welding and cutting on closed containers, such as tanks, drums, or containers, can cause them to blow up. Make sure proper steps have been taken.
- When pressure gas is used at the work site, special precautions are required to prevent hazardous situations.
- Connect work cable to the work as close to the welding zone as practical to prevent welding current from passing too long and creating fire hazards or overheat.
- Wear oil-free protective garments such as leather gloves, heavy shirt, cuffless trousers, high shoes, and a cap. Wear ear plugs when welding out of position or in confined places. Always wear safety glasses with side shields when in a welding area.
- Be attention that welding sparks and hot materials from welding can easily go through small cracks and openings to adjacent areas and start a fire. Remove fire hazardous from the welding area, if not possible, cover them thoroughly. Do not weld where flying sparks can strike flammable material and where the atmosphere may contain flammable dust, gas, or liquid vapors (such as gasoline).
- Protect yourself and others from flying sparks and hot metal. Remove any combustibles from operator before perform any welding.
- Keep a fire extinguisher readily available.
- Empty containers, tanks, drums, or pipes which have combustibles before perform welding.
- Remove stick electrode from electrode holder or cut off welding wire at contact tip when not in use.
- Apply correct fuses or circuit breakers. Do not oversize or bypass them.

Cylinder can explode if damaged

- Pressure gas cylinders contain gas under high pressure. If damaged, a cylinder can explode. Since gas cylinders are normally part of the welding process, be sure to treat them carefully.
- Cylinders should be located away from areas where they may be struck or subjected to physical damage. Use proper equipment, procedures, and sufficient number of persons to lift and move

cylinders.

- Always install cylinders in an upright position by securing to a stationary support or cylinder rack to prevent falling over or tipping.
- Keep a safe distance from arc welding or cutting operations and any other source of heat, sparks, or flame.
- No touching cylinder by welding electrode, electrode holder or any other electrically “hot” parts. Do not drape welding cables or welding torches over a gas cylinder.
- Use only correct compressed gas cylinders, regulators, hoses, and fittings designed for the process used; maintain them and associated parts in good condition.
- Use only compressed gas cylinders containing the correct shielding gas for the and properly operating regulators designed for the gas and pressure used. All hoses, fittings, etc. should be suitable for the application and maintained in good condition.
- Open the cylinder valve slowly and keep your head and face away from the cylinder valve outlet.
- Valve protection caps should be kept in place over valve expect when the cylinder is in use or connected for use.

Hot parts can burn

- Do not touch hot parts with bare hand or skin.
- Ensure equipment is cooled down before perform any work.
- If touching hot parts is needed, use proper tools and/or wear heavy, insulated welding gloves and clothing to prevent burns.

Flying metal or dirt can injure eyes

- When welding, chipping, wire brushing, and grinding can cause sparks and flying metal. It can hurt your eyes.
- Remember wear appropriate safety glasses with side shields when in welding zone, even under your welding helmet.

Noise can damage hearing

- Noise from some processes or equipment can damage hearing.
- Remember wear approved ear protection to protect ears if noise level is high.

Moving parts can injure

- Stay away from moving parts such as fans.
- Stay away from pinch points such as drive rolls.
- Keep all doors, panels, covers, and guards closed and securely in place.
- Have only qualified persons remove doors, panels, covers, or guards for servicing and maintenance.
- Reinstall doors, panels, covers, or guards when servicing and maintenance is finished and before reconnecting input power.

Overuse can cause overheating

- Use machine follow duty cycle. Reduce current or reduce duty cycle before starting to weld again.
- Allow cooling period.
- Do not block or filter airflow to unit.

Static can damage PCB

- Always wear wrist straps before touching PCB or parts.

- Use proper static-proof bags and package to store or move PCB.

Safety markings

- Equipment with CE-markings fulfils the basic requirements of the Low-Voltage and Electromagnetic Compatibility Guideline (e.g. relevant product standards according to EN 60 974).

Safety markings

- The equipment with the CCC mark meets the basic requirements stipulated in the Chinese standards GB / T15579.1-2013 and GB / T8118.

Safety markings

- This marking means that the product is certified for both the U.S. and Canadian markets, to the applicable U.S. and Canadian standards. The preferred location of the indicators is as shown.

Contents

1-GENERAL REMARKS....9

1-1 Power source features....9

1-2 Functional principle....9

1-3 Output characteristics....10

1-4 Duty cycle....10

1-5 Applications....11

1-6 Warning label....11

2-VERSIONS BRIEFS....12

3-BEFORE COMMISSIONING....12

3-1 Utilization for intended purpose only....12

3-2 Machine installation rules....12

3-3 Power source connection....12

3-4 Welding cables instruction....13

4-PoWer MIG 3500 C....15

4-1 System components....15

4-2 Basic equipments for welding....15

4-3 Control panel....16

4-4 Submenu....19

4-5 Save&Load function....24

4-6 Shift between preset current and preset wire feeding speed....25

4-7 Reset to factory setting....25

4-8 Interface....26

4-9 Installation....27

4-10 Technical data....30

4-11 Dimension....31

4-12 Disassembly and reassembly....32

5-TROUBLE SHOOTING.....35

6-CARE AND MAINTENANCE.....37

1-GENERAL REMARKS

This series welding machines apply IGBT soft switch inverter technology; the power source enjoys highly stable welding voltage against the fluctuation of power grid and arc length change. The internal control system achieves precise control of welding process to ensure optimal welding results.

1-1 Power source features

Highlights as follows:

- Enjoy reasonable static characteristic and sound dynamic characteristic
- Less spatter due to the advanced waveform control technology
- Precise adjustment of welding parameters.
- 2 step / 4step/spot welding
- Perfect functions of starting arc and reducing melting ball while stopping arc
- Fan on demand cooling system.
- Can save 10 sets user defined standards
- Fault self-diagnosis function with error code display
- Can achieve welding machine group control function by installing digital interface board
- Installed wire feeder, needle roller bearing design, stable wire feeding

1-2 Functional principle

This series of power sources adopt IGBT soft switchinverter technology to improvethe dynamic response rate and make the machines with small size and light weight. The control circuit's closed-loop control makes the power source enjoy strong ability against power grid fluctuation and perfect welding performance.

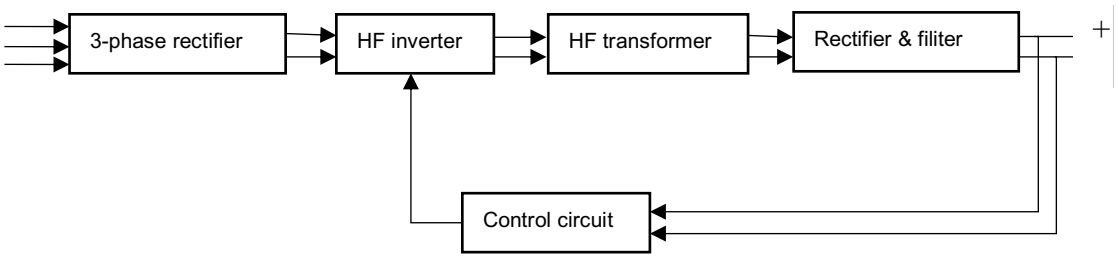

Fig.1-2-1: Schematic diagram

1-3 Output characteristics

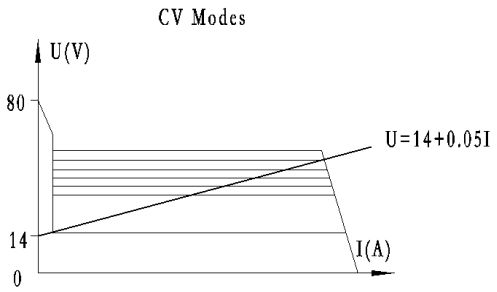

Fig.1-3-1: Output characteristics

1-4 Duty cycle

Duty cycle is percentage of 10 minutes that a machine can weld at rated load without overheating. If overheats, thermostat(s) will open, output stops. Wait for fifteen minutes for the machine to cool down. Reduce amperage or duty cycle before welding.

Note! Exceeding duty cycle can damage the machine and greatly reduce its lifespan.

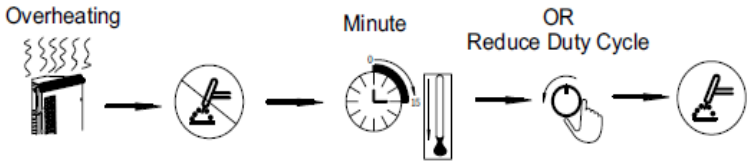

Fig.1-4-1: Duty cycle

1-5 Applications

Recommended areas of use as follows:

- Automobile and car manufacture industry
- Chemical structure and engineering
- Shipbuilding and offshore engineering
- Electric power construction
- Vehicle manufacturing
- Mechanical industry
- Other industries

1-6 Warning label

The warning label is affixed on the top of machine.

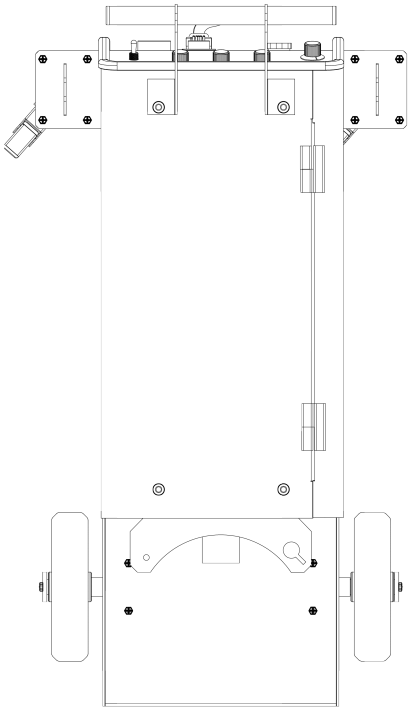

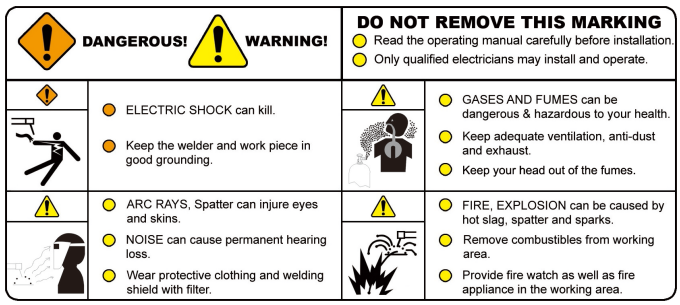

Fig. 1-6-1: Warning label

2-VERSIONS BRIEFS

Professional welding of special materials requires special welding parameters. Different models of the power sources are matched to different weldings.

- **PoWer MIG 3500 C**

PoWer MIG 3500C welding machine is an all-in-one design, with a push-pull handle, a cylinder holder, and 4 wheels at the bottom, so the cylinder can be placed at the back of the welding machine for easy movement. Built-in 4-rollers wire feeding mechanism, stable wire feeding.

3-BEFORE COMMISSIONING

Warning! Operating the equipment incorrectly can cause seriousinjury and damage. Do not use the functions described here until you have read and completely understood “safety rules”.

3-1 Utilization for intended purpose only

The power source may only be used for MIG/MAG. Utilization for other purposes, or in any other manner, shall be deemed to be "not in accordancewith the intended purpose". The manufacturer shall not be liable for any damageresulting from such improper use.Operate, inspect and maintain should follow all the instructions given in thismanual.

3-2 Machine installation rules

According to test, protection degree of this power source is IP21S (optional IP23S). However, the internal key components must be protected from direct soaking.

Warning! A machine that topples over or falls from its stand can cause injury. Place equipment on an even, firm floor in such a way that it stands firmly.

The venting duct is very important for safety protections. When choosing the machine location, make sure it is possible for the cooling air to freely enter and exit through the louvers on the front and back of machine. Anyelectroconductivemetallic dust like drillings must not be allowed to get sucked into themachine.

3-3 Power source connection

- The power source is designed to run on the voltage given on the nameplate.

- The mains cables and plugs must be mounted in accordance with the relevanttechnical standards.

- The power supply sockets that come with power source are designed to use strictlyaccording to the marked voltages.

Note!Inadequately dimensioned electrical installations can lead to serious damage. The mains lead, and its fuseprotection, must be dimensioned in accordance with the local power supply. The technical data shown on thenameplate shall apply.

3-4 Welding cables instruction

When welding, please pay attention to the followings:

a. The welding cables should be kept as short as possible;

b. If extended cable is used, please do as shown in Fig. 3-4-1.

Wrong Coil the excess ground cable and weldingcable in same direction respectively.	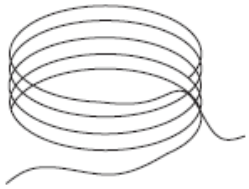
Correct Straighten the ground cable and weldingcable and make them close to each other. Bundle the ground cable and welding cabletogether, running the wires close to theground.	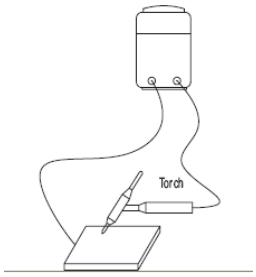

Correct When the excess cables are only be used byrolling up, coil the cables to two windings inreverse direction and overlap them. The number of turns for A is same as thenumber for B. Handle the welding cable and ground cableaccording to above-mentioned method.	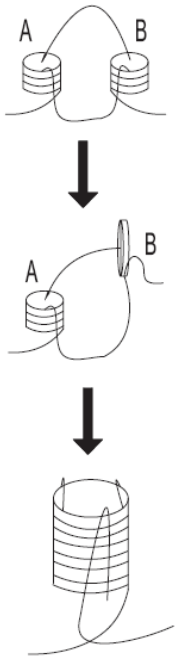

Fig. 3-4-1: Welding cables instruction

4-PoWer MIG 3500 C

4-1 System components

PoWer MIG 3500 C welding machine can be equipped with many different accessories and can be used in different special sites with different configurations.

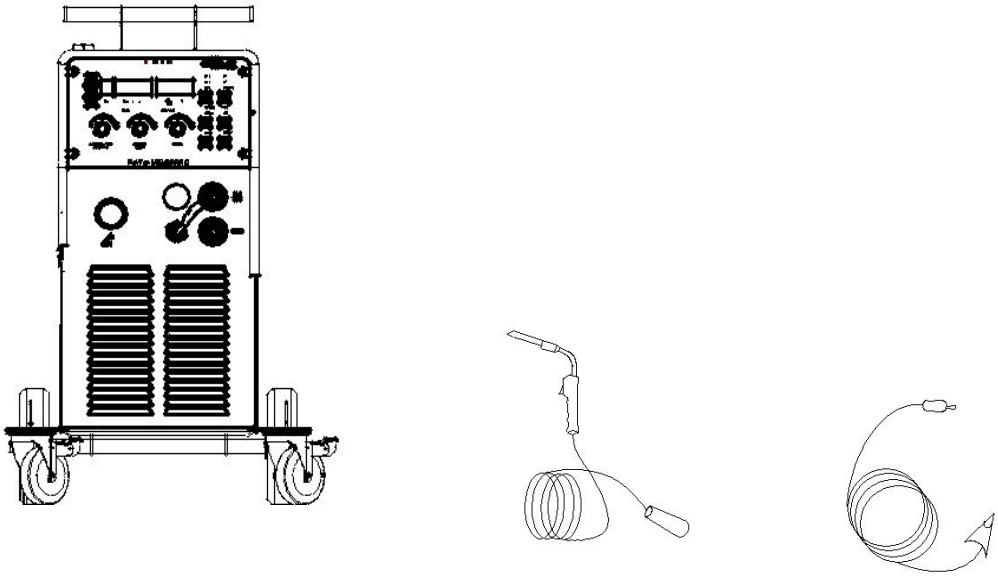

Fig. 4-1-1: System components

4-2 Basic equipments for welding

Only be equipped with the necessary accessories, can the power source PoWer MIG 3500 C operate well. The following is the needed accessories list.

MIG/MAG welding

- Power source
- Ground cable
- Welding torch
- gas regulator, gas hose, gas cylinder (to supply the machine with shielding gas)

- Welding wire

4-3 Control panel

The functions on the control panels are all arranged in a very logical way. The various modes and parameters needed for welding are easy to selectby pressing the appropriate button; parameters are easy to be adjusted by rotating encoder. Synergic adjustment makes the complicated operation much easier.

Note! Some described parameters in this manual may be slightly different from the power source, some identification may be slightly different from power source identification, but the manner of working is the same.

Warning! Operating the equipment incorrectly can cause serious injury and damage. Do not use the functions described here until you have read and completely understood all content of this manual.

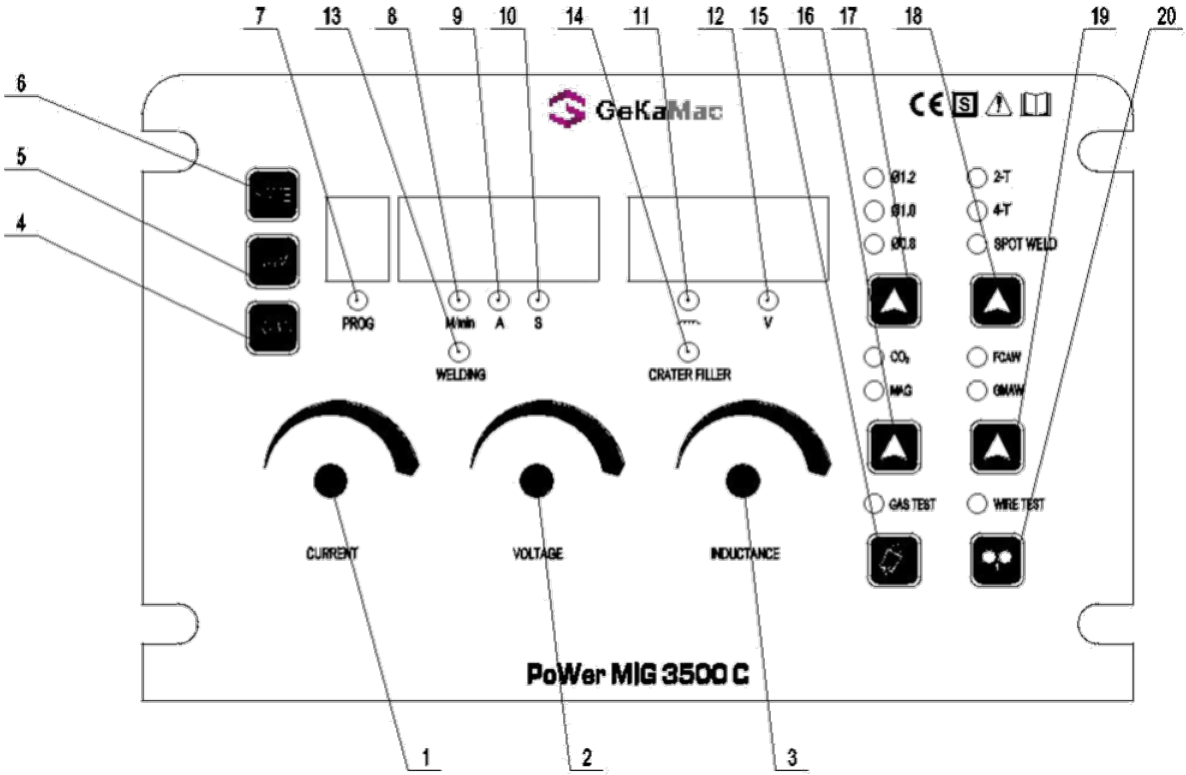

Fig. 4-3-1: Control panel

1. Crater filler current/ Spot weld time knob

- Preset crater filler current when on 4-step mode;
- Preset spot weld time when on spot welding mode, adjust range is 0.5~5s.

2. Crater filler voltage knob

Preset crater filler voltage when on 4-step mode.

On sub-menu interface, adjust parameters value.

3. Inductance adjustment knob

Adjust this knob to change welding stability, welding depth and spatter, adjust range is 1~50.

1 arc is hard and stable, welding depth becomes shallow, spatter is large;

50 when inductance becomes larger, arc is soft, welding depth becomes deeper, and spatter is small.

4. Load button

Recall stored parameters,Please refer to chapter 4-5, save & load function.

5.Channel NUM button

For channel number selection, press this button, channel number will change from 0~9 by turn.

6.Save button

Save new parameters,Please refer to chapter 4-5, save & load function.

7.PROG indicator

It lights up when recalling welding standard in channel number, and means welding machine is on load mode. Re-press LOAD button, JOB indicator lights off.

8. Wire feeding speed indicator

It lights up when displayer shows wire feeding speed (M/min).

9. Current indicator

It lights up when displayer shows preset current (A) or real current (A).

10. Spot welding time indicator

It lights up when adjusting “SPOT WELD TIME” knob on spot weld mode.

11. Inductance indicator

It lights up when adjusting inductance value.

12. Voltage indicator

It lights up when displayer shows preset voltage (V) or real voltage (V).

13. Welding indicator

It lights up when adjusting welding parameters, displayer shows welding standard.

14. Crater filler indicator

It lights up when adjusting crater filler parameters, displayer shows crater filler standard. Indicator lights off 5s after stopping adjusting, welding indicator lights up, and displayer recovers to show welding standard.

15.Gas test button

Gas begins to flow out when press this button, and automatically stop feeding after 30s. Re-press during this 30s, will stop feeding gas. It is used to adjust gas flow rate.

16. Individual/Synergic modes selection button

Choose between Individual/Synergic modes. On individual mode, voltage and current are adjusted by corresponding knobs on wire feeder controller; on synergic mode, voltage auto matches with current, can fine turn voltage by wire feeder controller voltage given knob.

17. Welding wire diameter selection button

Can select relative wire diameter, corresponding indicator will light on.

18. Working mode selection button

Choose between 2-step/4-step/spot welding modes.

Torch operation mode introduction:

Graphic symbol

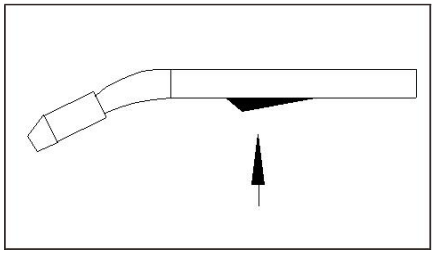

Fig. 4-3-2: Press torch trigger

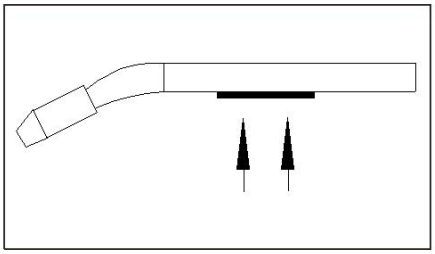

Fig. 4-3-3: Hold torch trigger

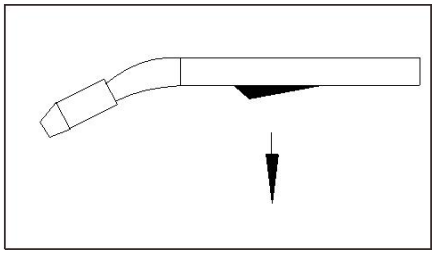

Fig. 4-3-4: Release torch trigger

P03 (811)……Pre-gas time

I……Welding-current: Uniform thermal input into the preheated base metals.

P06……Crater filler standard: To prevent burn-through of the base metal due to too much heat input at the end of welding.

P04 (812)……Post-gas time

P01 (810)……Burn back time

P08……Spot welding time

- 2-step mode

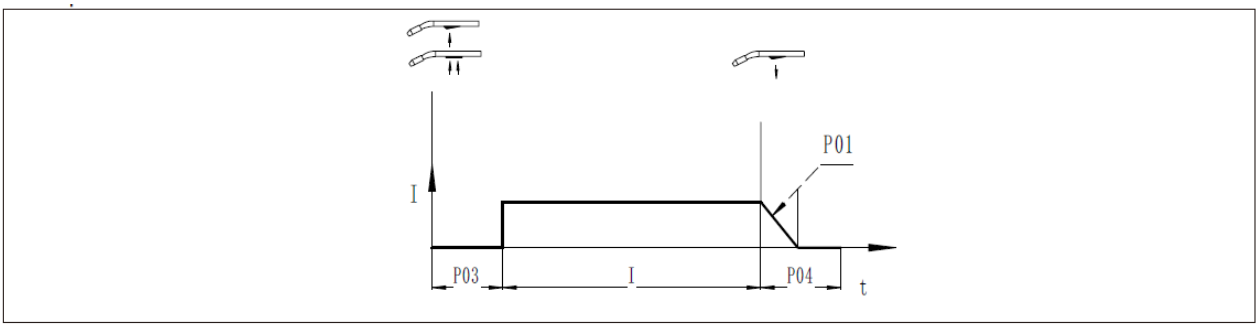

Fig. 4-3-5: 2-step mode

- 4-step mode

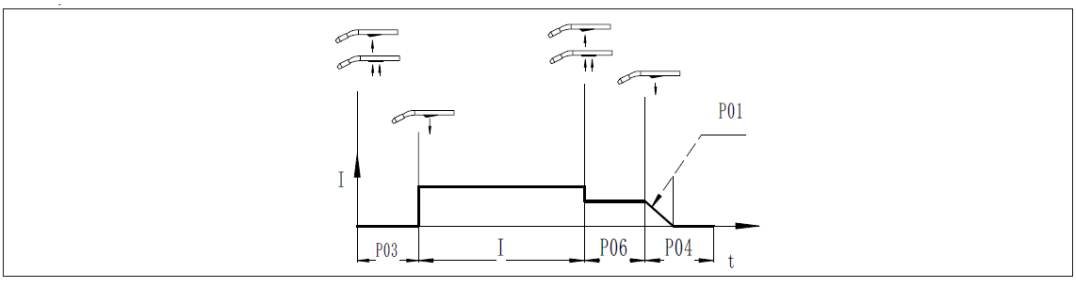

Fig. 4-3-6: 4-step mode

- Spot welding mode

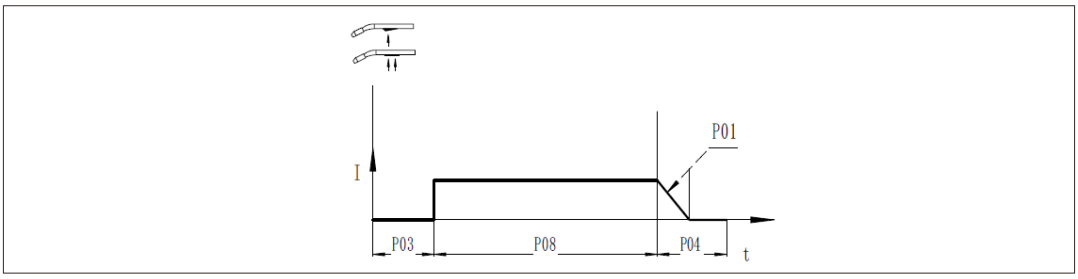

Fig. 4-3-7: Spot welding mode

19. FCAW/GMAW selection button

Choose according to wire type, corresponding indicator lights up.

20. Wire test button

Press to feed wire, release to stop feeding wire (this button has same function with wire feeder controller inch wire feeding button)

4-4 Submenu

● **Submenu parameters**

Item	Parameters	Setting Range	Min. Value	Factory Setting
P01	Burn back time	0.01~2.00s	0.01s	0.10s
P02	Slow wire feeding	OFF/1.0~22.0M/min	0.1 M/min	3.0 M/min
P03	Gas pre-flow time	0.1~9.99S	0.1S	0.20S
P04	Gas post-flow time	0.1~9.99S	0.1S	1.0S
P05*	Initial period	1~200％	1％	135％
	Small adjustment of Initial standard voltage	-5.0 ~ +5.0	0.1	0
P06*	Crater fillerperiod	1~200％	1％	50％
	Small adjustment of Crater filler voltage	-5.0 ~ +5.0	0.1	0
P07	Transitional period	0.1~10.0S	0.1S	0.30S
P08	Spot welding time	0.01~9.99S	0.01S	0.50S
P09	Digital/Analog signal selection	OFF/ON/PLC	——	OFF
P11	Inductance adjust	1~50	1	25

P17	Special 2-step arc start time	OFF~10S	0.1s	OFF
P18	Special 2-step arc stop time	OFF~10S	0.1s	OFF
P19	Separate adjustment mode	OFF/ON	——	OFF
P22	Pulse current when start arc	-5.0~5.0	1	0
P23	Pulse time when start arc	-99~99	1	0
P30	Inch wire feeding speed	1.0~21.0m/min	0.1	3m/min
P34	Ball removing voltage	0~100%	1%	0
P35	Ball removing voltage time	0~0.4S	0.01S	0.20S

Table4-4-1: Submenu parameter

- **P01 Burn back time**

If too long time, the wire will burn back too much with too large melting ball at the end of wire; if too short time,the wire will stick with the workpiece.

- **P02 Slow wire feeding**

With too quick feeding speed, the wire will be easily exploding with failed arc-starting; if the feeding speed is slower than the melting speed, the long arc will cause conductive tip burned.

- **P03 Gas pre-flow time**

Longer time will cause waste of gas and low efficiency; shorter time will cause air hole during arc-starting.

- **P04 Gas post-flow time**

Longer time will cause waste of gas; shorter time will cause air hole during crater filler period.

- **P05 Initial period**

Special 4-step mode and set the percentage between initial period and pre-set parameters. When adjust the initial period, press F2 and then adjust dial (1), make correction of the arc length of the initial period. Press F2 again to exit.

*The initial current specification is adjusted as a percentage of the welding current, and the welding voltage is automatically matched. If you need to adjust the initial standard voltage by a small amount, hold down the "crater filler voltage" knob 3S, rotate the crater filler voltage knob, adjust the standard voltage value, the adjustment range is "-5.0 ~ +5.0"

- **P06 Crater filler period**

4-Step mode, set the percentage between crater filler period and pre-set parameters. When adjust the crater filler, press F2 and then adjust dial (1), make correction of arc length of the crater filler. Press F2 again to exit.

*The crater filler current specification is adjusted as a percentage of the welding current, and the welding voltage is automatically matched. If you need to adjust the crater filler standard voltage by a small amount, hold down the "crater filler voltage" knob 3 S, rotate the crater filler voltage knob, adjust the standard voltage value, the adjustment range is "-5.0 ~ +5.0".

- **P07 Transition period.**

During the special 4-step mode, the time cost from starting current to normal welding current and then to post current.

- **P08 Spot welding time**

Choose spot welding process and set the welding time.

- **P09 Panel control /Remote control /PLC control mode selection**

Panel control mode,perset current & voltage can be adjusted by welding machine control panel.

Remote control mode,perset current & voltage can be adjusted by wirefeeder.

PLC control mode,perset current & voltage can be adjusted by PLC or other control device.

- **P11 Inductance adjust**

Adjust this parameter to change welding stability, welding depth and spatter, adjust range is 1~50.

1 arc is hard and stable, welding depth becomes shallow, spatter is large;

50 when inductance becomes larger, arc is soft, welding depth becomes deeper, and spatter is small.

- **P17 Special 2-step arc starting time**

On special 2-step mode, time for start period.When choose at number, it is time for start period, when reach to this time, will turn to welding standard; when choose at OFF, the function closes.

- **P18 Special 2 step arc stopping time**

On special 2-step mode, time for crater filler time. When choose at number, it is time for crater filler, when reach to this time, will turn to stop welding standard; when choose at OFF, the function closes.

- **P19 Separate adjustment mode**

Analog wire feeder: in ON mode, current and voltage can adjust and display separately; in OFF mode, current and voltage issynergic adjusted, that means voltage will automatically match with current if current is changed.

Digital wire feeder: in ON mode, rotate current adjustment knob to adjust current; rotate voltage adjustment knob to adjustarc length, but voltage is not changed; in OFF mode, current and voltage is synergic adjusted.

- **P23 Pulse time when start arc**

Too short will cause difficult to start arc; too long will cause large energy when start arc, and arc has defect.

- **P24 Short circuit rise rate**

The higher the short circuit current rise rate is, the harder the arc is, and the large spatter is; otherwise, arc will be softer,

spatter will be lesser. Too small will cause unstable welding.

- **P30 Inch wire feeding speed**

Set manual wire feeding speed.

- **P34 Ball removing voltage**

When remove welding ball, set welding ball removing voltage.

- **P35 Ball removing voltage time**

When remove welding ball, set welding ball removing time.

● **Enter submenu**

Press “inductance” knob and “wire diameter” button at the same time for 3s, then enter sub-menu.

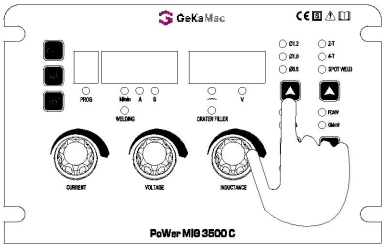

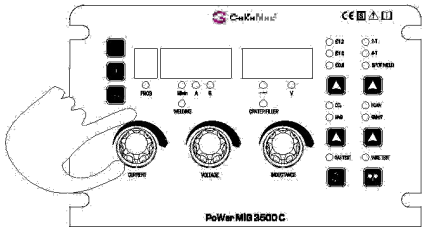

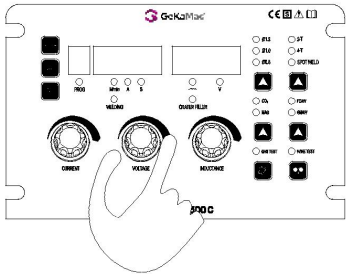

Fig. 4-4-1: Enter submenu Fig. 4-4-2: Select parameters Fig. 4-4-3: Adjust value

● **Submenu parameters adjustment**

Adjust “crater filler current/spot weld time” knob to select parameters between P01 to P35;

Adjust “crater filler voltage” knob to adjust value of corresponding parameter

● **Exit Submenu**

Press “inductance” knob and “wire diameter” button at the same time for 3s, then exit sub-menu,or wait 5 seconds and automatically exit the submenu.

● **Submenu parameter for arc start/ crater filler/ short circuit control characteristic**

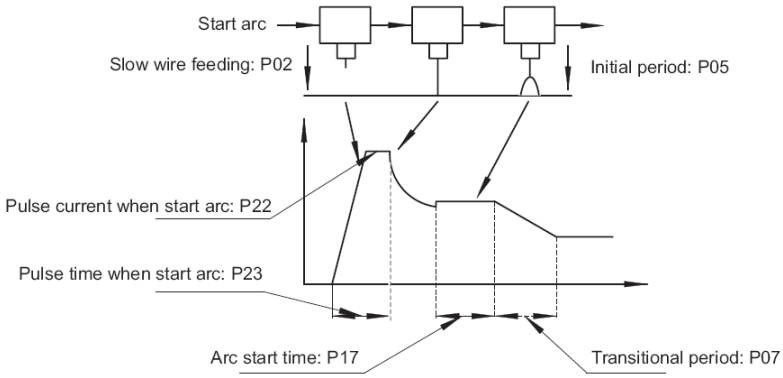

Fig. 4-4-4 Operating mode sequence diagram of start arc

When welding voltage and current settings are correct, but not easy to start arc, please adjust sub-menu parameter as follow table.

Item	Function	Adjust method
P02	Wire feed speed before ignition arc	If the welding wire strikes the workpiece quickly before starting the arc, the spatter is severe during the starting arc → reduce the P02 value; if the arc is not open or the starting is very slow → increase the P02 value
P05	Initial period, default state is OFF	Arc start section in weld seam is narrow or workpiece does not melt – increase the P05/P17 value Arc start section in weld seam is wide or workpiece burned through – reduce the P05/P17 value No problem of arc start section in weld seam - OFF
P17	Initial period function time (arc start time)	
P07	Transitional time from initial period to welding period	Formation changes a lot for arc start section in weld seam – increase the P07 value No problem of arc start section in weld seam - OFF
P22	Pulse current when start arc	Longer arc when start arc, work piece burns seriously, large spatter – increase the P22/P23 value Difficult to start arc, wire explodes, work piece and wire does not fuse - OFF
P23	Pulse time when start arc	

Table 4-4-2 Sub-menu parameter

● **Submenu parameter for crater filler control characteristic**

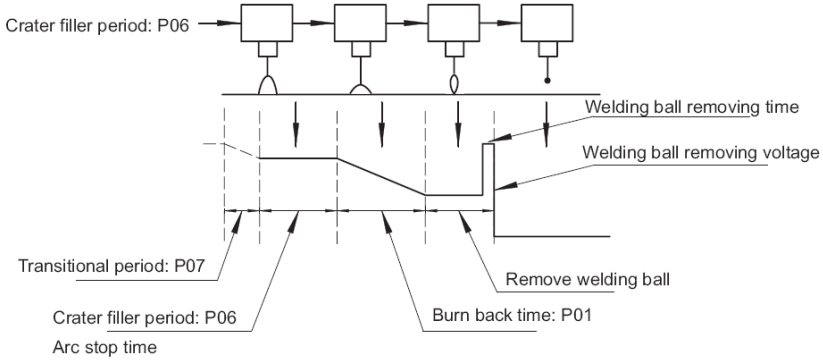

Fig. 4-4-5 Operating mode sequence diagram of crater filler

Item	Function	Adjust method
P07	Transitional time from welding period to crater filler period	Weld seam formation is narrow – increase the paramter value Weld seam formation is wide – reduce the parameter value No problem of weld seam formation - OFF
P18	Crater filler time, default is OFF	
P06	Crater filler period	
P01	Burn back time	Wire sticks with work piece, work piece burns seriously - increase the P01 value Wire sticks with contact tip - reduce the P01 value
P34	Ball removing voltage	No arc start when re-start arc – increase the P34/P35 value Arc is long when re-start arc, work piece burns – reduce the P34/P35 value
P35	Ball removing voltage time	

Table4-4-3 Sub-menu parameter

4-5 Save&Load function

Save function can improve the welding quality of semi-automatic and fully automatic operation. Traditionally, some repetitive technical data needs to be recorded and reused. Welding machine can store 10 different welding parameters.

Save function

1.Set the welding parameters that you want to store.

2.Press the”SAVE” button, channel no. flicks 3s.

3.Press the “NUM” button, channel number will change from 0~9 by turn.

4.Re-press the “SAVE” button during channel no.falsh, then the current panel status and welding standard will save into this channel no.

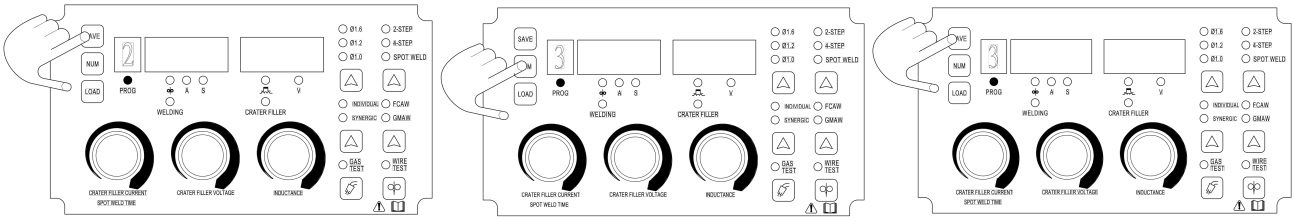

Fig. 4-5-1 Save function

NOTE Use this function with caution: if there is already a parameter in the channel number, after using the save function, the original parameter in this channel number will be replaced by the new parameter.

Load function

1.Press the ”LOAD” button, then panel status and welding standard saved in this channel is recalled. When on Load mode, JOB indicator lights on, and the panel status and welding standard can not adjust.

2.Press the “NUM” button, channel number will change from 0~9 by turn. then panel status and welding standard saved

this channel no.is recalled.

3. Re-press the ”LOAD” button to exit.

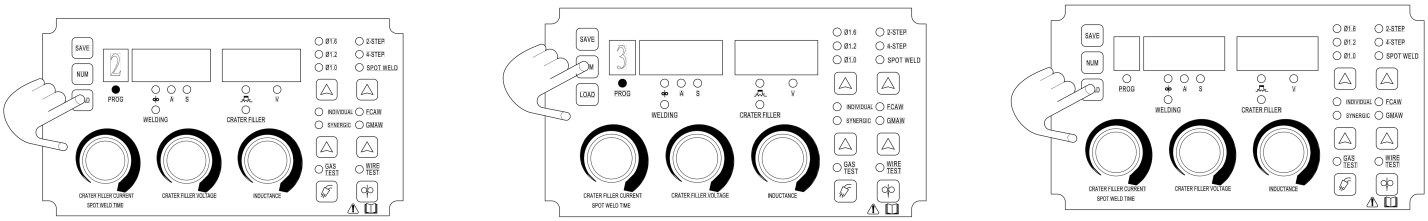

Fig. 4-5-2 Load function

4-6 Shift between preset current and preset wire feeding speed

Press the “crater filler current” and “crater filler voltage” together for 1s; the current displayer will display the preset current and the preset wire feeding speed alternately.

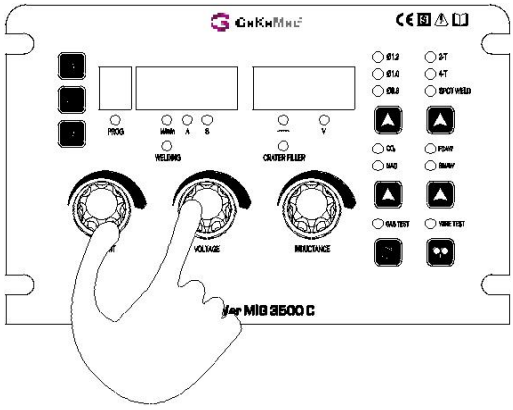

Fig. 4-6-1 shift display

4-7 Reset to factory setting

Press the ”crater filler current” knob and “inductance” knob together for 3s; the welding parameters will be reset to factory default setting.

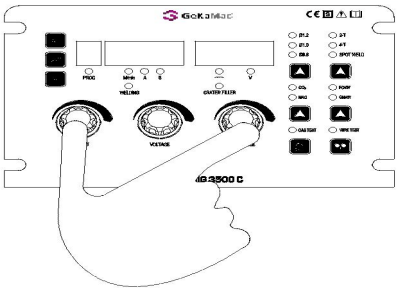

Fig. 4-7-1 Load function

4-8 Interface

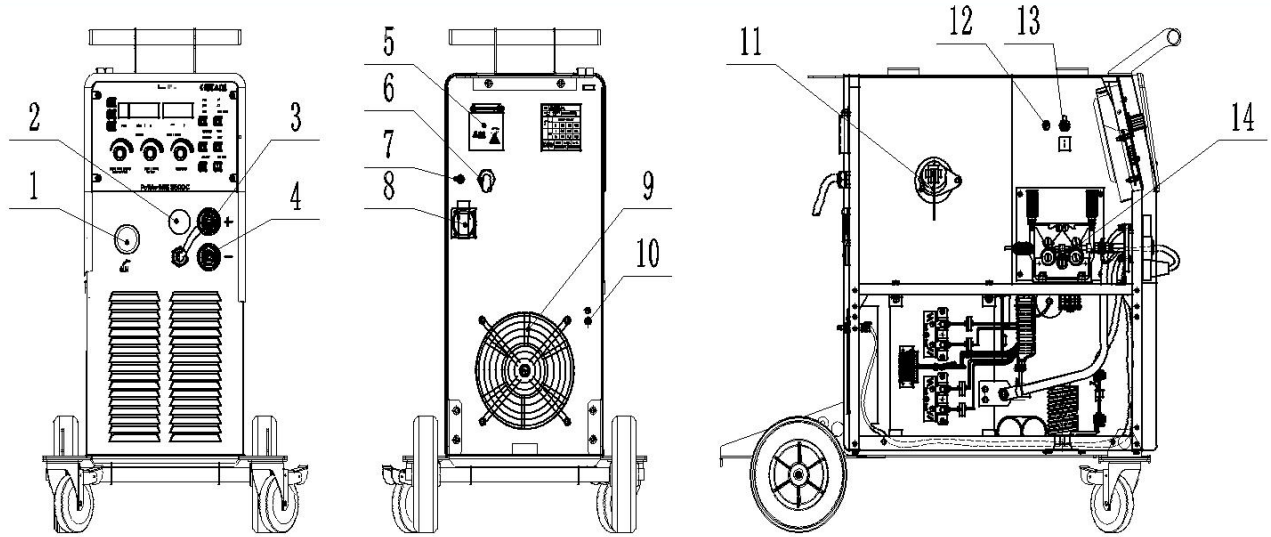

Fig. 4-8-1: Interface

1. Euro-type connector (+)

In MIG/MAG: connect to welding torch

2. Polarity conversion plug

It is used to connect with polarity conversion socket. Only when they connect well, welding torch can work.

In MIG/MAG solid wire: it is used to connect with output termial (+);

In FCAW: it is used to connect with output termial (-).

3. Welding machine output termial (+)

In MIG/MAG solid wire: it is used to connect with polarity conversion plug;

In Lift TIG (GTAW): it is used to connect with ground cable;

In SMAW (Stick): it is used to connect with welding cable.

4. Welding machine output termial (-)

In MIG/MAG flux cored wire: it is used to connect with polarity conversion plug;

In Lift TIG (GTAW): it is used to connect with torch plug;

In Stick (SMAW): it is used to connect with ground cable.

5. Circuit breaker

The function of circuit breaker is to protect welding machine and operator by automatic trip to turn-off power supply when overload or short circuit happens to the power source. Normally, the switch flipped to upward means power-on. To start or stop the welding machine is done by the mains switch in the distribution box. Please do not take this circuit breaker as the power switch.

6.Power input cable

7.Fuse

Control transformer fuse, protect control circuit parts.

8. Power supply socket for gas heater (AV36V)

It is used to connect the heater coil of the gas regulator.

9. Gas inlet

Connect with gas cylinder by gas hose

10. Fan

For cooling down the heating spare parts inside of the welding machine.

11. Wire spool axle

For bearing the standard-size wire spool

12.Gas test

13.Wire test

14. Wire feeding device

4-9 Installation

Warning! An electric shock can be fatal. If the machine is plugged intothe mains electricitysupply during installation, there is high risk of very serious injury and damage. Do not use the functions described here until you have read and completely understood “safety rules” in thebeginning.Only carry out work on the machine when

- the mains switch is on turn-off position,
- the machine is unplugged from the mains.

● **Installation of the system components**

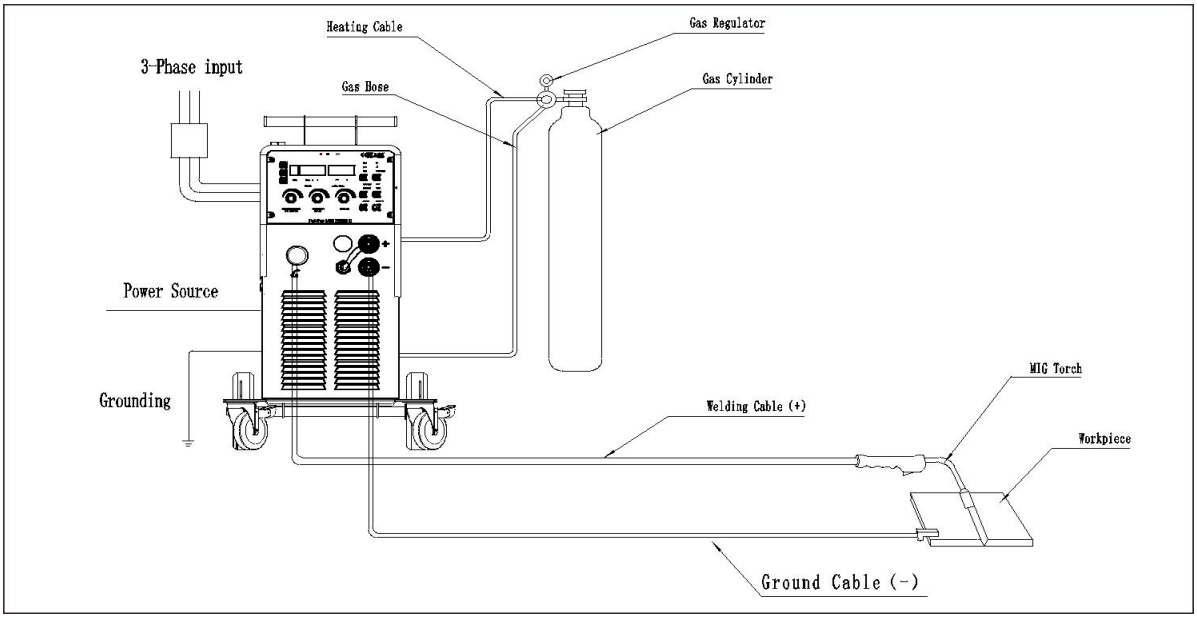

Fig. 4-9-1: Installation of the system components

●Gas cylinder installation

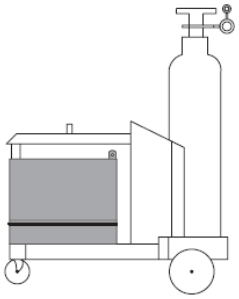

1. Stand the gas cylinder on the trolley and secure it by fixing the cylinder strap around a point in the top third of the cylinder-but never around the neck of the cylinder.
2. Take the protective cap off the gas cylinder.
3. Gently turn the gas-cylinder value anticlockwise, and blow off any dust and dirt.
4. Screw the pressure regulator onto the gas cylinder and tighten it.
5. Connect the shielding-gas connector to the pressure regulator.

Fig. 4-9-4: Gas cylinder installation

● Mounting the torch

To ensure normal welding, please make sure that the wire diameter, contact tip, welding torch, welding wire tube are matched to each other.. Choose wire feeding tubes according to wires of different diameters and materials.

- Steel wire hose is suitablefor hard wire, such as carbon steel wire, stainless steel wire.

For installation of steel wire feed hose

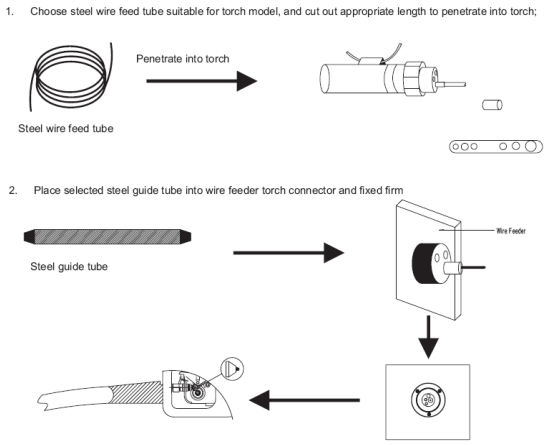

Fig. 4-9-5: Installation for steel wire feed tube

Note!If the wire hose is too tight or too loose, it will increase resistance for wire feeding and cause wire feeding instable.

● Installation environment requirements

1. It should be placed indoors without direct sunlight, rainproof, low humidity and less dust. The ambient air temperature range is -10℃~+40℃.

2. The inclination to the ground should not exceed 10°.

3. There should be no wind in the welding station, if any, it should be covered.

4. The welding machine is more than 20cm away from the wall, and the distance between the welding machine is more than 10cm.

5. When using water-cooled welding torch, pay attention to anti-freezing.

● power supply and cable requirement

Please note the size of fuse and circuit breaker in the table below are for reference only.

Model		350
Power supply		3 phase, AC400V±10%, 50Hz
Electricity grid min. power (KVA)	Power grid	17
	Generator	26
Input protection(A)	Fuse	30
	Circuit breaker	32
Cable size (mm²)	Power cord	≥2.5
	Output cable	35

	Protective GND wire	≥2.5

Table4-9-1: Power supply and cable requirement

Note! Welding machine must be taken special design if it is powered by generator, please contact with manufacturer if you have such needs.

● **connections of Power cord and distribution box**

Warning! -Avoid hot-line work

- Operating by professional electrician

- Avoid connecting two power sources to one breaker

- Please refer to Table 4-9-1 to check if standard of input voltage, breaker and input cable is suitable

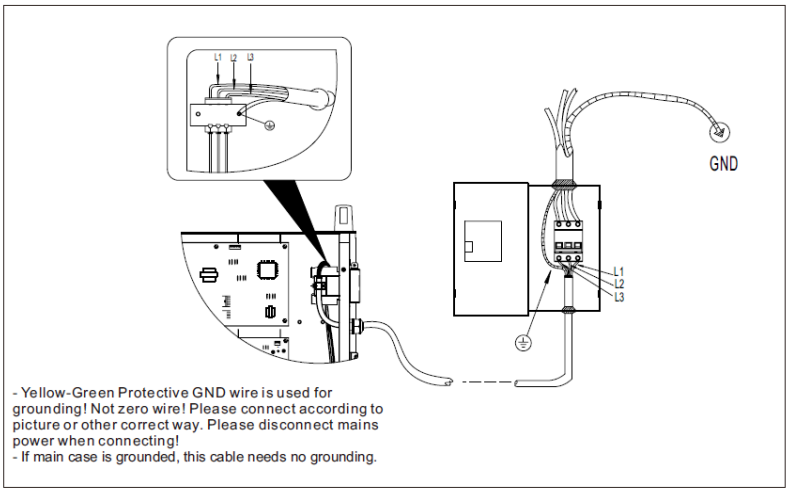

Fig. 4-9-6: Connections of power cord and distribution box

4-10 Technical data

Model	350
Voltage/Frequency (3~)	400V±10％/50Hz
Rated input power (KVA)	13
Rated input current(A)	19

Range of welding current(A)	60~350
Range of welding voltage(V)	14~40
OCV(V)	70
Duty cycle (%)	60
Full-load efficiency(%)	≥87
Power factor	≥0.95
Wire diameter (mm)	Φ0.8,Φ1.0,Φ1.2
Gas flow(L/min)	10~25
Dimension(mm^3)	630×330×570
Weight (Kg)	60
Isolation degree	H
IP class	IP21S

Table 4-10-1: PoWer MIG 3500 C technical data

4-11 Dimension

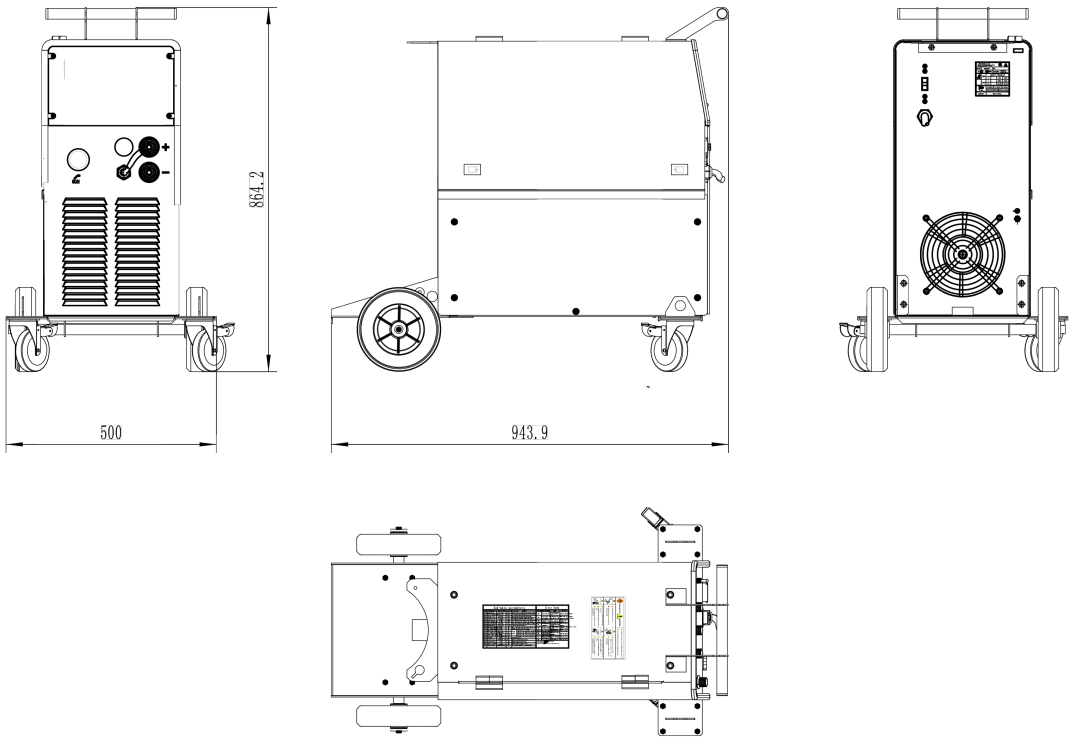

Fig. 4-11-1: Dimension

Item	Unit(mm)	Unit(inches)
length	944	37.2
Width	500	19.7
Height	865	34

Table. 4-11-1: Dimension

4-12 Disassembly and reassembly

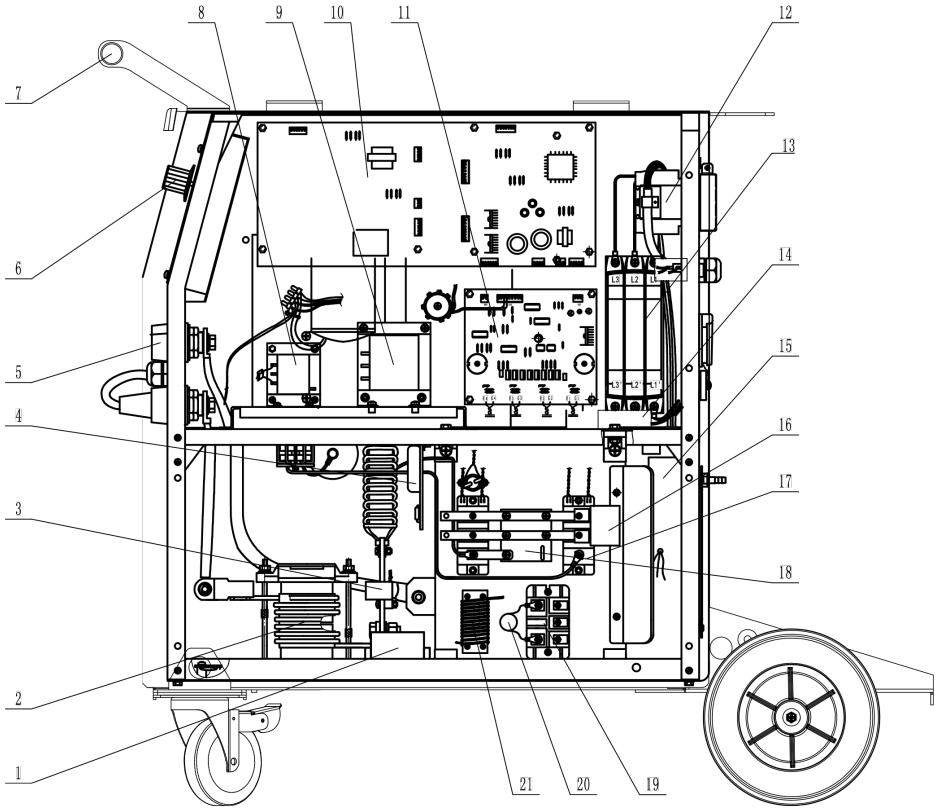

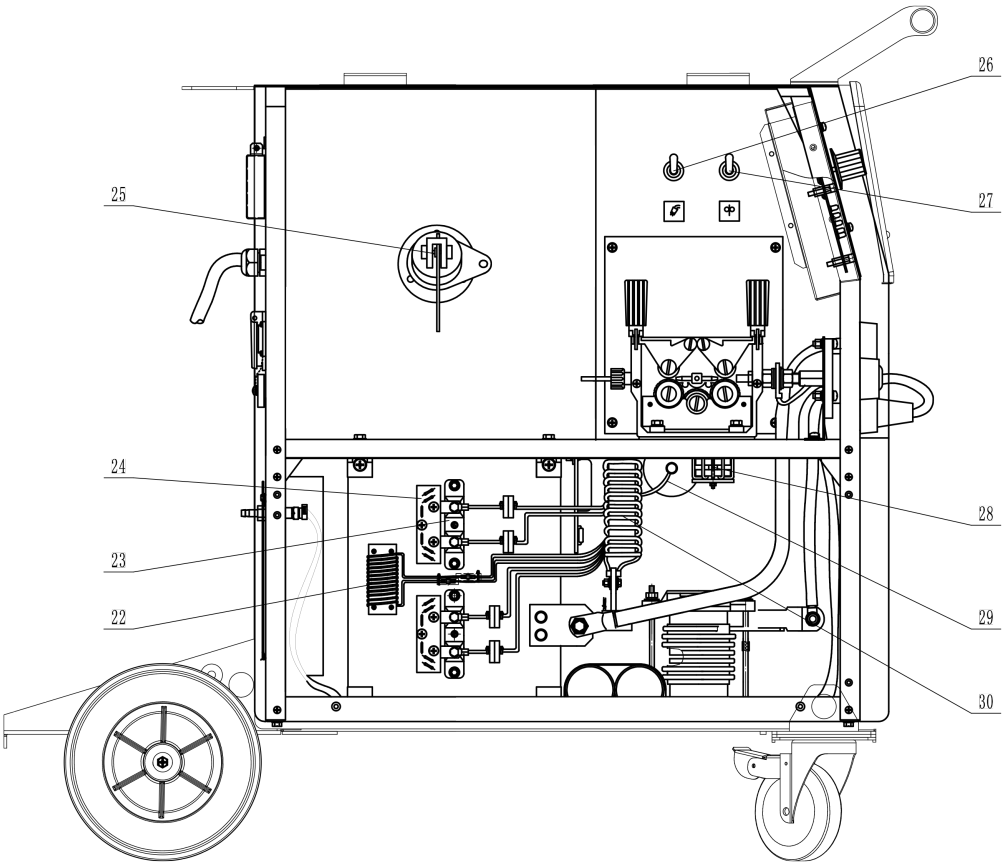

Fig. 4-12-1: Disassemble and reassembly

No.	Item	Stock No.	Remarks
1	Polypropylene capacitor	722001-00070	
2	Reactor	763004-00158	
3	Current sensor	753001-00020	
4	Current transformer board	220149-00016	
5	Quick socket	740002-00026	
6	Display board	220503-00007	
7	handle	766002-01188	
8	Power transformer I	763001-00048	
9	Power transformer II	763001-00049	
10	Main control board	210580-01108	
11	Drive board	210310-00020	
12	Main circuit breaker	745011-00021	
13	Filter	752004-00017	

14	Solid state relay	715004-00003	
15	Fan	746001-00087	
16	Polypropylene capacitor	722001-00067	
17	IGBT module	735007-00048	
18	IGBT protection board	220005-00137	
19	Three phase rectifier module	735005-00002	
20	Varistor	720021-00017	
21	Input filter inductance	220479-00002	
22	Current exchange inductor	220281-00008	
23	Fast recovery diode module	735006-00029	
24	Diode protection board	220455-00002	
25	Wire spool shaft	324029-00001	
26	Toggle switch	745003-00026	
27	Toggle switch	745003-00026	
28	Resonant inductor	220521-00007	
29	Resonance capacitor	722001-00073	
30	Main transformer	220629-00023	

Table.4-12-1: Main components list

5-TROUBLE SHOOTING

Warning! An electric shock can be fatal. Before doing any work on the machine:

-Switch it off and unplug it from the mains

-Put up a clearly legible and easy-to-understand warning sign to stop anybody inadvertentlyswitching it on again

-Check to make sure the electrically charged components (e.g.capacitors) have been discharged.

-Bolts in machine case also work for ground connection. Never use other bolt that can not work for ground connection.

● **Error code display**

This series of machines have automatic protection and error code display function. Relevant Cause & Remedy can be found according to below Error codes, as shown in Table 6-1

Error code	Trouble	Cause	Remedy
E10	Torch trigger fault	No current output after pressing torch trigger for 2s	Release torch trigger
E15	Torch fault when turn on the machine	The torch trigger is OFF when machine is ON	Turn off the machine, reset the torch trigger
E17	Over-current protection	Short circuit of Output; Current Sensor fault	Check output cable and replace Current Sensor
E18	Voltage feedback is unusual	Voltage Feedback Wire is broken; or Main Control Board is damaged	Check Voltage Feedback Wire ; or replace Main Control Board
E19	Over-heat protection	The welding machine is over heat; or Temperature Relay fault	Shut down the welding machine and wait for cooling; or replace Temperature Relay
E24	Communication is abnormal	Main control board	replace

Table 5-1: Displayed error code

Important! If any error message that is not described here appears on the displays, then the fault is one that can only be put right by a service technical. Make a note of the error message shown in the display, and the serial number and

configuration of the power source, and get in touch with our after-sale service, giving them a detailed description of the error.

● **Power source trouble shooting**

Note! The flowing troubles and causes are uncertain. However, during the process of MIG Pulse and the normal using conditions, that might happen.

No.	Problem	Cause	Remedy
01	No display after power on	1.Default phase 2.Circuit breaker on rear board is damaged 3.Fuse is broken	1.Check power supply 2.Replace 3.Replace (2A)
02	Circuit breaker trips immediately after the machine is power on	1.Circuit breaker fault 2.IGBT module is damaged 3.Three-phase rectifier bridge is damaged 4.Varistor is damaged	1.Replace 2.Replace IGBT module and drive board 3.Replace 4.Replace
03	Circuit breaker trips during welding	1.Machine long time overload working 2.Circuit breaker is damaged	1.Use as rated duty cycle 2.Replace
04	Welding current is not adjustable	1.Wire feeder control cable is broken or controller is damaged 2.Control board is damaged 3.Current sensor in welding machine is damaged or its cable is broken	Replace
05	Arc is unstable, large spatter	1.Improper welding standard 2.Contact tip is serious worn	1.Adjust properly 2.Replace
06	CO2 gas regulator does not heat	1.CO2 gas regulator fault 2.Heating cable is broken or short circuit 3.Thermistor of heating power source is damaged	1. Replace 2.Repair 3.Replace
07	Press torch trigger, wire feeding is normal, but no gas comes out from torch	1.Control board is damaged 2.Solenoid valve is damaged 3.Control cable is broken	1.Replace 2.Replace 3.Re-connect
08	Press torch trigger, wire feeder does not work, no open circuit voltage indication	1.Torch trigger is damaged 2.Wire feeder control cable is broken 3.Control board is damaged	1.Replace 2.Repair 3.Replace

Table.5-2: Trouble shooting

6-CARE AND MAINTENANCE

- **Before open the machine**

Warning! An electric shock can be fatal. Before doing any work on the machine:

-Switch it off and unplug it from the mains

-Put up a clearly legible and easy-to-understand warning sign to stop anybody inadvertentlyswitching it on again

-Check to make sure the electrically charged components (e.g.capacitors) have been discharged.

-Bolts in machine case also work for ground connection. Never use other bolt that cannot work for ground connection.

Maintenance

Please follow the instructions as below to ensure normal lifespan of power source.

- Conduct safety check at regular intervals (see “Safety rules”)
- Dismantle machine side panels and clean machine inside with clean and low-pressure compressed air by professionaltechnician, not less than twice per year. Clean the components at a certain distance only;
- If a lot of dust has accumulated, clean the cooling-airducts.

- **Maintenance of water-cooled welding torch**

Forwater-cooled welding torch:

- Check the connections of water cooling system
- Check the coolant level and cleanliness(clean coolant only)
- Frequently check coolant’s backflow state

- **Daily maintenance**

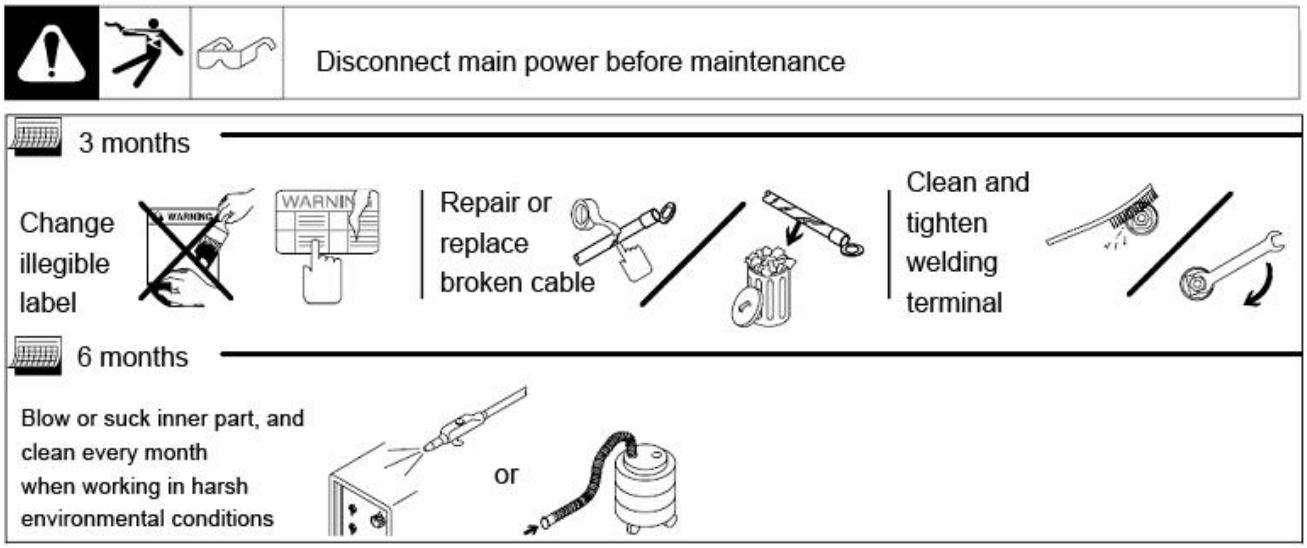

Fig. 6-1: Daily maintenance